MHT-X 860/780

TECHNICAL DATA SHEET

MHT-X **860**

MHT-X **780**

MANITOU

www.manitou.com

MHT-X 860/780

	MHT-X 860	MHT-X 780
Lifting		
Max. capacity at 600 mm LC	6000 kg	8000 kg
Max. lifting height	8.10 m	6.80 m
Unladen time		
Lifting	11.5 s	12 s
Lowering	7.8 s	9.0 s
Extension	7.7 s	9.5 s
Retraction	5.1 s	5.5 s
Tyres	18-22.5 16 PR	18-22.5 16 PR
Braking		
Service brake	multiple-disk brake with oil bath on front and rear axles	
Parking brake	automatic negative handbrake	
Engine	PERKINS	
Type	1104 D - E 44 TA	
Cubic capacity	4400 cm^3	
Power	144 HP / 106 kW	
Max. torque	556 Nm - 1400 rpm	
Injection	direct	
Cooling	water	
Laden drawbar pull	10500 daN	
Gradeability (unladen/laden)	75% / 49%	118% / 50%
Transmission	hydrostatic with automatic power regulation 4 wheel drive	
Reversing shift	electro magnetic	
Number of gears (forward/reverse)	2/2	
Max. travel speed (may vary according to applicable regulations)	28 kph	
Axle	DANA	
Steering mode	4 wheel steer 3 steering modes	
Controls	JSM® Joystick multi-fonction load limiter cut off system - EN15000 norm	
Hydraulics		
Load Sensing Pump	140 l/min - 275 bar	
Capacities		
Hydraulic oil	140 l	
Fuel	120 l	
Unladen weight (with forks)	11580 kg	12800 kg
Dimensions		
1. Front wheel centre to carriage	1.54 m	1.07 m
2. Ground clearance	0.41 m	0.38 m
3. Overall length to carriage	5.36 m	5.22 m
4. Wheelbase	2.73 m	2.67 m
5. Rear wheel centre to rear face	1.09 m	1.48 m
6. Overall width of cab	0.86 m	0.86 m
7. Inside tyre width	1.93 m	1.99 m
8. Overall width	2.40 m	2.44 m
9. Overall height	2.46 m	2.52 m
Standard forks (length x width x thickness)	1200 x 200 x 60 mm	
Turning radius (over tyres)	3.78 m	4.30 m
Frame levelling	+/- 10°	-
Carriage rotation (crowd/dump)	11°/123°	12°/124°
Noise and vibration		
Noise at driving position (LpA)	80.8 dB	
Environmental noise (LwA)	105 dB	
Vibration to whole hand/arm	<2.5 m/s^2	
Vibration on driver's body	<0.5 m/s^2	

MHT-X 860

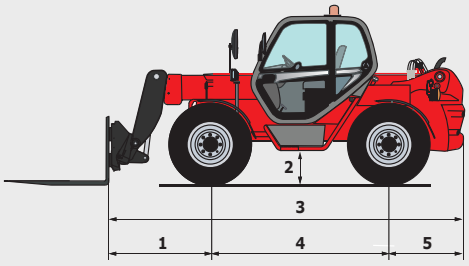

MHT-X 780

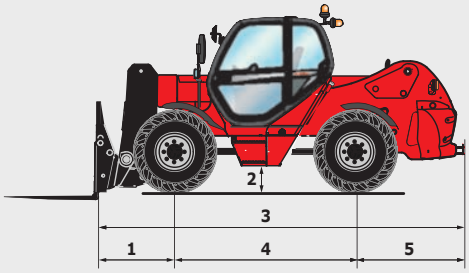

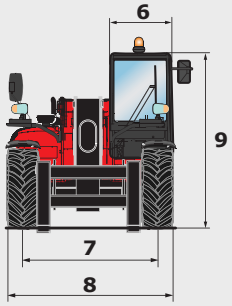

This brochure describes versions and configuration options for MANITOU products which may be fitted with different equipment. The equipment described in this brochure may be standard, optional or not available depending on version. MANITOU reserves the right to change the specifications shown and described at any time and without prior warning. The manufacturer is not liable for the specifications given. For more information, contact your MANITOU dealer. Non-contractual document. Product descriptions may differ from actual products. List of specifications is not comprehensive. The logos and visual identity of the company are the property of MANITOU and may not be used without authorisation. All rights reserved. The photos and diagrams contained in this brochure are provided for information only.
MANITOU BF SA - Limited company with board of directors - Share capital: 39,547,824 euros - 857 802 508 RCS Nantes

MHT-X 860/780

MHT-X 860 Rough terrain load chart

Standard EN1459 B

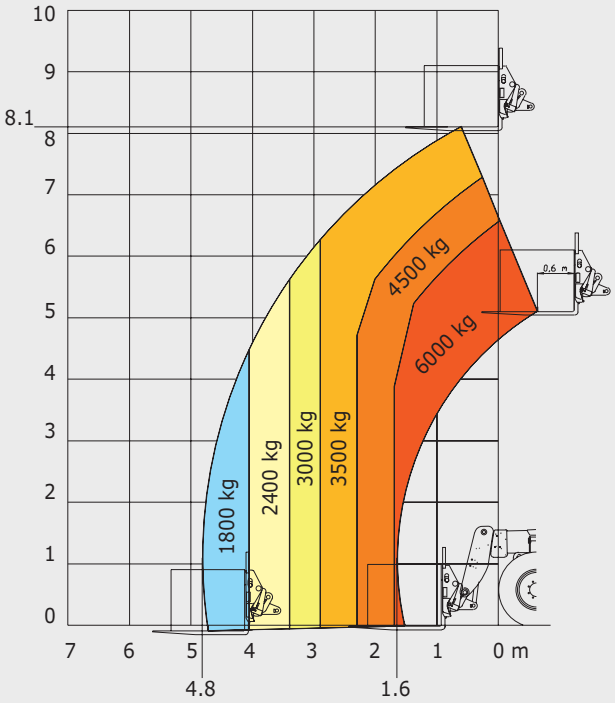

MHT-X 780 Rough terrain load chart

Standard EN1459 B

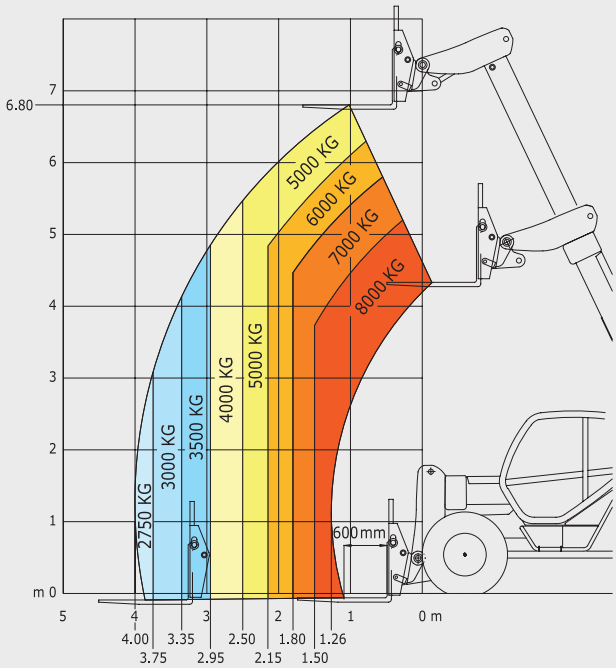

MHT-X 780 Industriel load chart

Standard EN1459 A

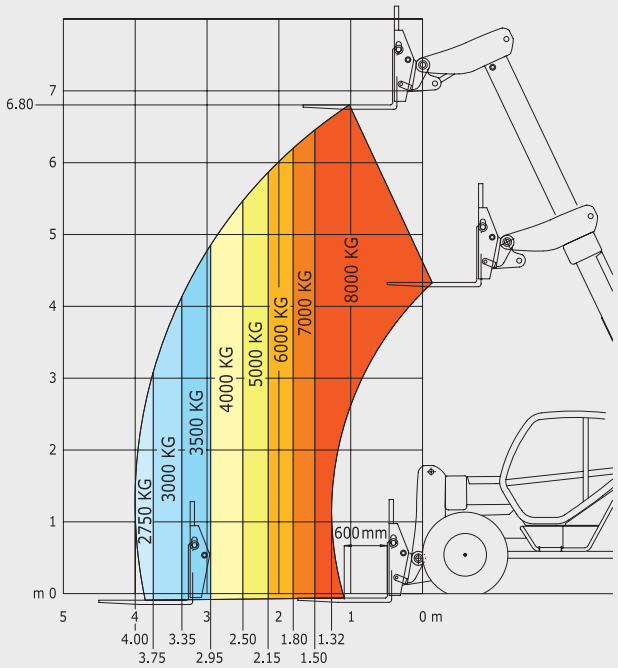

This brochure describes versions and configuration options for MANITOU products which may be fitted with different equipment. The equipment described in this brochure may be standard, optional or not available depending on version. MANITOU reserves the right to change the specifications shown and described at any time and without prior warning. The manufacturer is not liable for the specifications given. For more information, contact your MANITOU dealer. Non-contractual document. Product descriptions may differ from actual products. List of specifications is not comprehensive. The logos and visual identity of the company are the property of MANITOU and may not be used without authorisation. All rights reserved. The photos and diagrams contained in this brochure are provided for information only.
MANITOU BF SA - Limited company with board of directors - Share capital: 39,547,824 euros - 857 802 508 RCS Nantes

Your nearest dealer **MANITOU**:

Head office:
B.P. 249 - 430 rue de l'Aubinière - 44158 Ancenis Cedex - France
Tel. : 00 33 (0)2 40 09 10 11 - Fax : 00 33 (0)2 40 09 10 97
www.manitou.com

FT053EN_B_1013_MHTX860_780